PowerFlex, Type C

Self-Supporting, Flexible High-Pressure Metal Hose.

Very robust all-metal design. AISI 321 (similar to 1.4541) stainless-steel inside hose with stainless-steel wire covering. Outside hose: Steel supporting helix. Drain sprout and connector made of bright brass. Ready to fit.

Features

- Temperature-resistant up to **400°C**
- High pressure resistance (nominal pressure PN up to **160 bars**)
- Exact positioning
- Retaining any adjusted position, even at high pressure
- Wear resistant
- Ample width across flats

For use in

- Mechanical engineering and tool-making
- Injection-molding machinery
- Rough environment, e.g. in foundries

Applications

- Coolant and blow hose for high pressure and heavy-duty mechanical use
- Separation spray hose for supply of separating agents to calenders

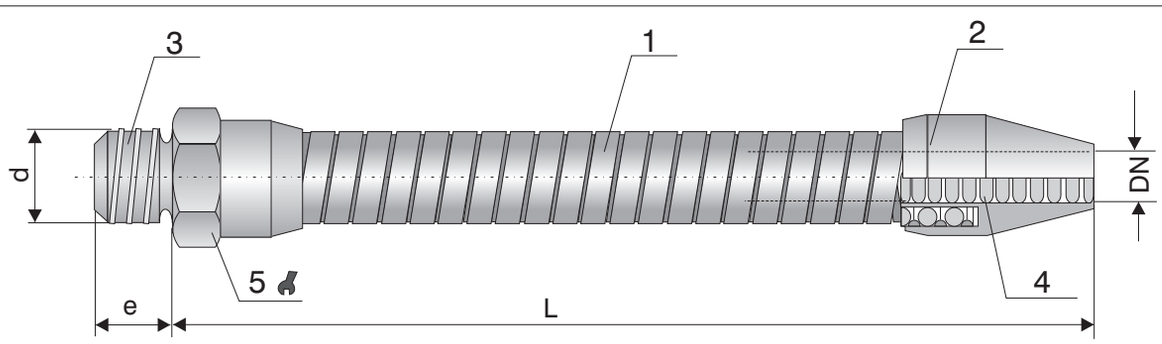

Construction:

1. Steel supporting helix
2. Brass drain sprout
3. Brass connector
4. Annular inside corrugated hose
5. Ample width across flats

PowerFlex, Type C

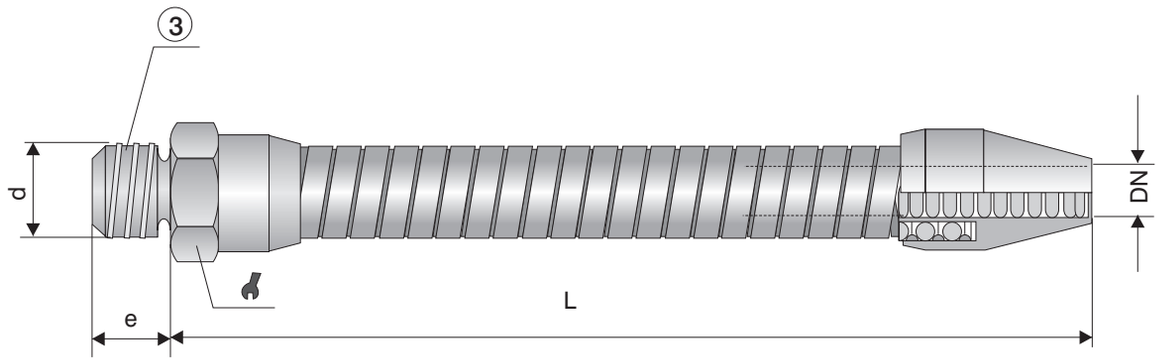

Art. No.	Inside hose dia.	Nominal Pressure	③Threaded connector (AG) acc. to DIN 3852-A, Part 2		Width across flats	min. bending radius	Length (±5)
	DN	PN	d	e		r_{min}	L
	mm	bar		mm	mm	mm	mm
PowerFlex C/06/320	6	160	G 1/4”	12	24	110	320
PowerFlex C/06/400	6	160	G 1/4”	12	24	110	400
PowerFlex C/06/500	6	160	G 1/4”	12	24	110	500
PowerFlex C/06/630	6	160	G 1/4”	12	24	110	630
PowerFlex C/10/320	10	100	G 3/8”	12	30	110	320
PowerFlex C/10/400	10	100	G 3/8”	12	30	110	400
PowerFlex C/10/500	10	100	G 3/8”	12	30	110	500
PowerFlex C/10/630	10	100	G 3/8”	12	30	110	630

Dimensions in mm. Subject to change without notice.

- **Custom length** on request.
- For **stopcocks,** see our PowerFlex Catalog.

May also be used in conjunction with our **magnetic bases** (see PowerFlex Catalog)