Eccentric block-type clamp Series EBS

- flexible, sturdy and compact design
- simple handling - quick action clamp system
- high operating reliability by self-locking

With this mechanical eccentric block-type clamp “EBS” the user has a very compact and sturdy clamping element with high clamping forces and low tightening torques. To emphasize is the simple, manual operation (180° turn of the service hegagon), and the high operating reliability. The EBS - clamping element can be used for the manual tool clamping on presses and punches. Beyond this it can be used for plenty of clamping tasks in the entire field of mechanical engineering.

Technical data :

EBS Size	nominal clamping force [kN]	max. tightening torque ”SW1” [Nm]	max. static load [kN]	clamping range “h” [mm]	weight ca.[kg]	T-slot - DIN 650 m*	H min/max
20	20	40	40	0 - 31	1,8	18 22	18/24 22/29
40	40	75	80	0 - 51	3,6	22 28	22/29 28/38

* further T-slot dimensions on request

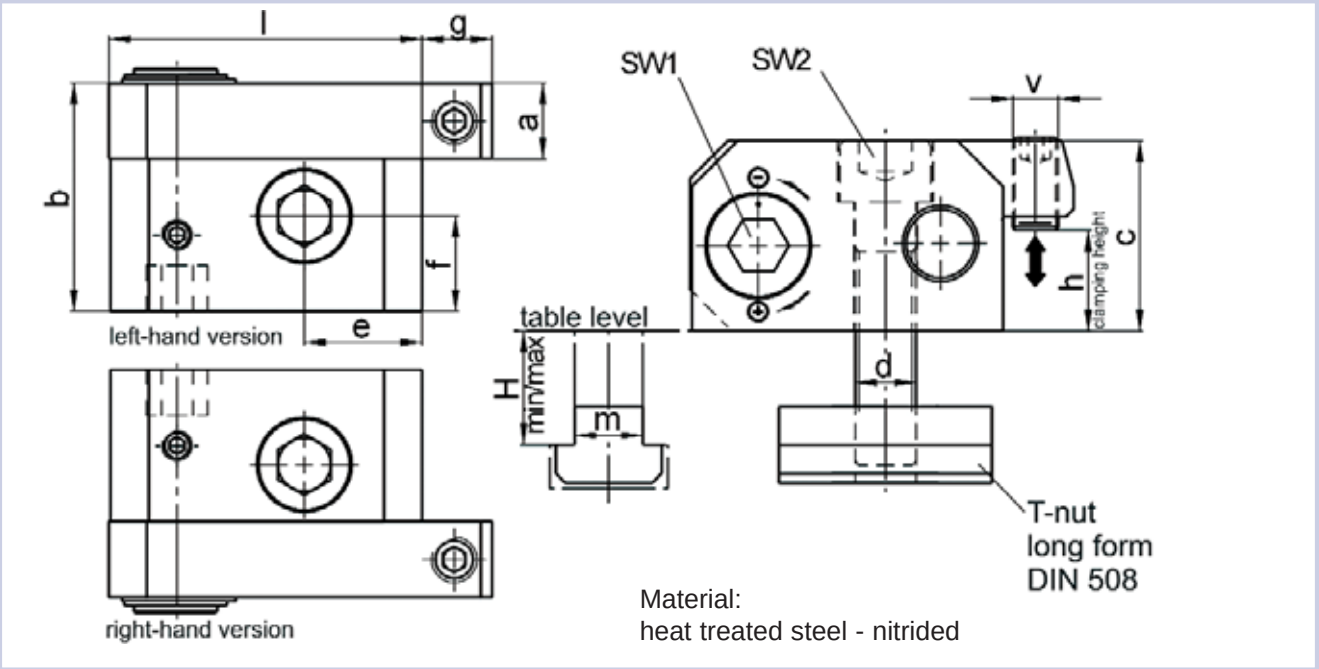

Dimensions: (mm) length dimensions according to DIN ISO 2768 mH

EBS Size	a	b	c	d (Q12.9)	e	f	g	h*	L	SW 1 SW 2	V**
20	20	60	50	M 16	31	25	19	0 - 31	82	14	M 12
40	25	75	70	M 20	36	32	23	0 - 51	100	17	M 16

* tolerance: max. ±0,2mm; greater clamping edge heights with distance plates are available on request.
** alternativ: bolt lever with setscrew and adjustment thread for variable clamping edge heigths

Mark at the service hexagon

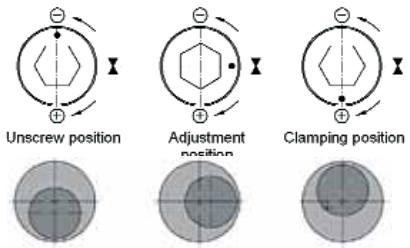

Eccentric principle

Ordering example:

with T-Nut: **EBS 20 L - 30 - 22**

- Series
- Size
- Left hand version
- Clamping heigth “h” =30 mm
- T-Nut size “m” = 22 mm (DIN 650)

www.jakobantriebstechnik.de Fon (+49) 60 22 - 22 08 - 0 Fax (+49) 60 22 - 22 08 - 22
JAKOB Antriebstechnik